Op. 1004D40 ENGINE - POSITION ON STAND AND REMOVE

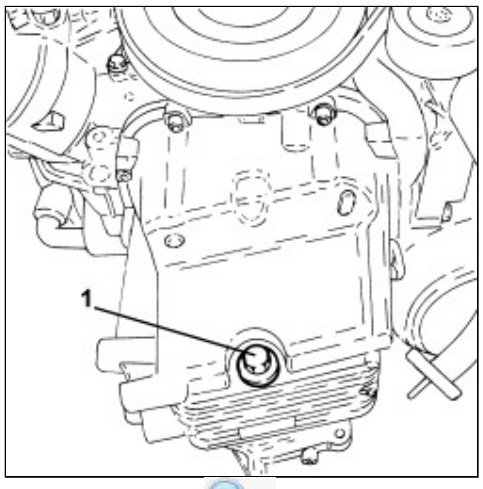

1. Unscrew the drain plug on the engine block sump and drain the engine oil.

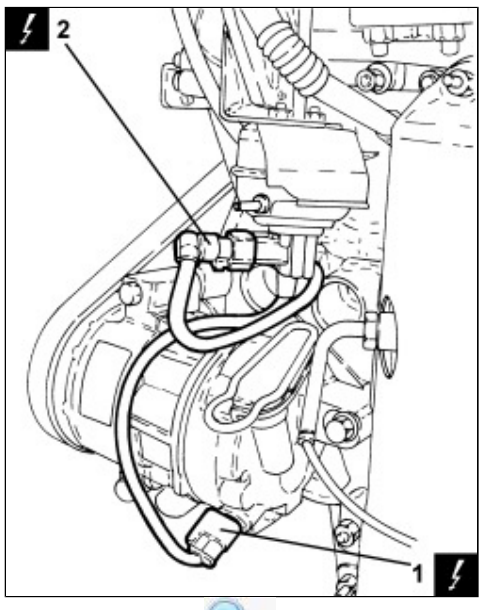

1. Disconnect the electrical connection for the air conditioning compressor engagement electromagnet.

	Description	Connector
1	Air conditioning compressor engagement electro-magnet	See L020 AIR CONDITIONING COMPRESSOR ENGAGEMENT SOLENOID

2. Disconnect the electrical connection for the variable geometry turbine position sensor.

	Description	Connector
2	Variable geometry turbine position sensor	See K206 VARIABLE GEOMETRY TURBINE POSITION SENSOR

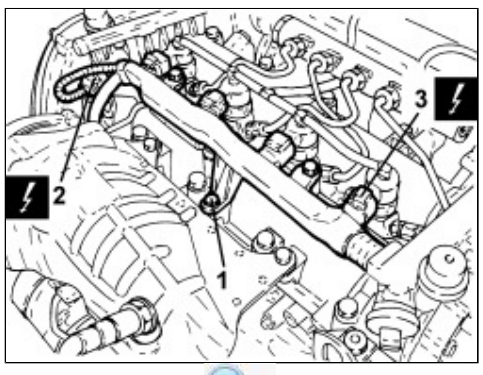

1. Unscrew the injector wiring duct fixing screws.

2. Detach the timing sensor electrical connection.

	Description	Connector
2	Timing sensor	See K047 TIMING SENSOR

3. Detach the electrical connections for the injectors.

	Description	Connector
3	Injector	See N070 INJECTOR

1. Detach the electrical connection for the throttle body.

	Description	Connector
1	Integrated throttle body actuator	See N075 INTEGRATED THROTTLE BODY ACTUATOR

2. Detach the electrical connection for the engine coolant temperature sensor.

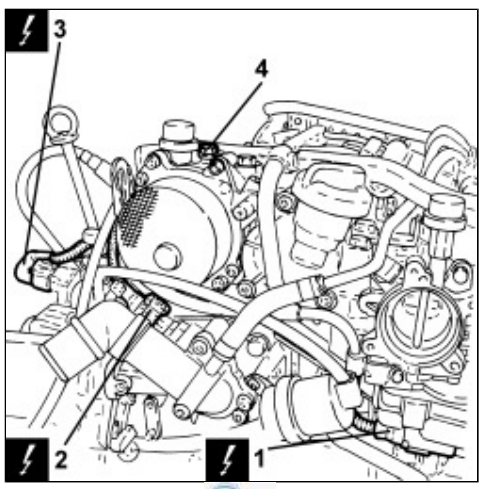

	Description	Connector
2	Engine coolant temperature sensor/sender unit	See K036 ENGINE COOLANT TEMPERATURE SENSOR/SENDER UNIT

3. Disconnect the electrical connection for the EGR. heat exchanger water supply actuator control solenoid.

	Description	Connector
3	EGR heat exchanger water supply actuator control solenoid	See L103 SOLENOID CONTROLLING ACTUATOR DELIVERING WATER TO EGR HEAT EXCHANGER

4. Undo the screw fixing the wiring duct.

1. Detach the engine oil level sensor electrical connection.

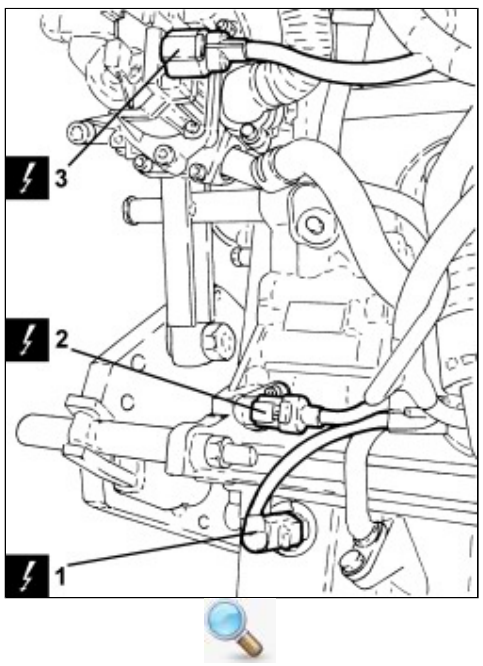

	Description	Connector
1	Engine oil level sensor	See K032 ENGINE OIL LEVEL SENSOR

2. Detach the rpm sensor electrical connection.

	Description	Connector
2	Rpm sensor	See K046 RPM SENSOR

3. Disconnect the electrical connection for the EGR solenoid valve.

	Description	Connector
3	EGR solenoid	See L030 EGR SOLENOID

1. Disconnect the electrical connection for the engine oil pressure switch.

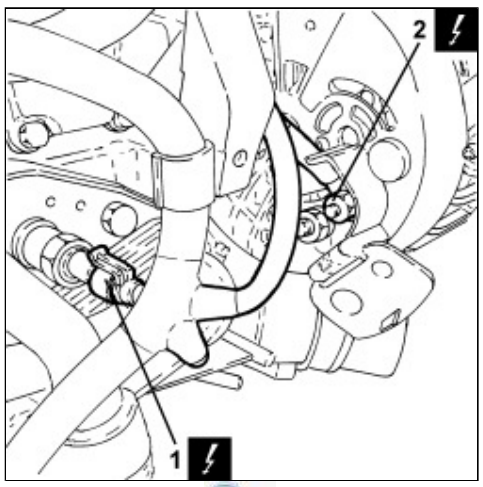

	Description	Connector
1	Engine oil pressure sensor (switch)	See K030 ENGINE OIL PRESSURE SENSOR (SWITCH)

2. Undo the nut and disconnect the alternator earth lead.

	Description	Connector
2	Alternator	See A010 ALTERNATOR

1. Detach the fuel pressure sensor electrical connection.

	Description	Connector

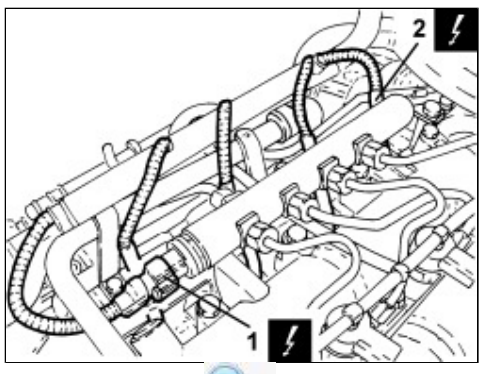

1	Fuel pressure sensor	See K083 FUEL PRESSURE SENSOR

2. Disconnect the heater plug electrical connections.

	Description	Connector
	Heater plugs	See A040 HEATER PLUGS

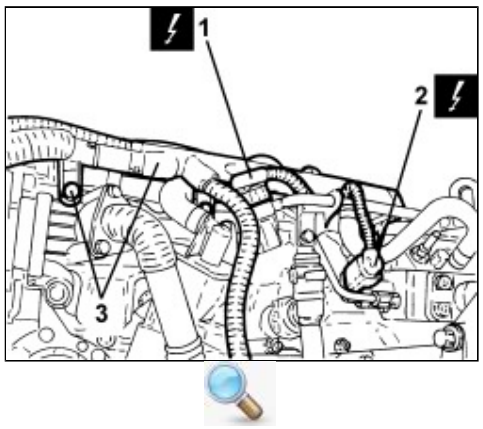

1. Disconnect the electrical connection for the air temperature and pressure sensor.

	Description	Connector
	Air pressure/temperature sensor	See K044 AIR TEMPERATURE/PRESSURE SENSOR

2. Disconnect the electrical connection for the fuel pressure regulator.

	Description	Connector
2	Fuel pressure regulator	See N077 FUEL PRESSURE REGULATOR

3. Undo the screws and remove the engine wiring complete with duct.

1. Remove the electrical connection for the oxygen sensor from the mounting bracket.

2. Undo the fastenings (2a) and remove the turbocharger heat shield (2b).

3. Undo the nuts (3a) and remove the heat shield for the catalytic converter-DPF assembly (3b).

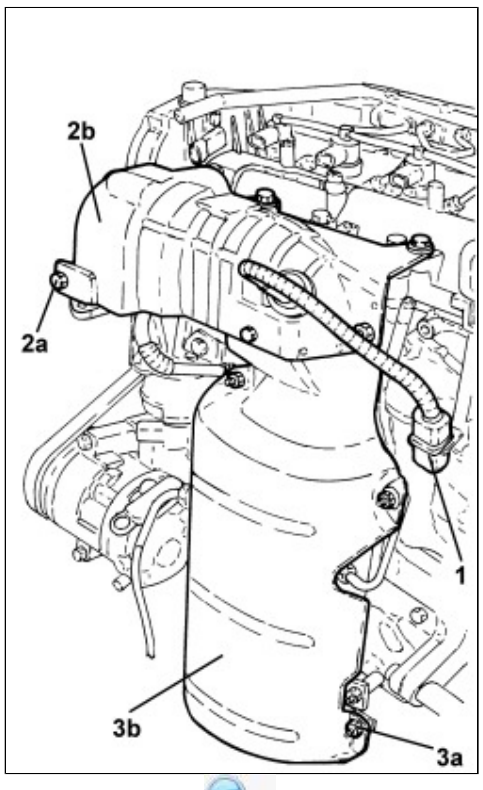

1. Undo the nut and loosen the collar securing the catalytic converter-DPF assembly.

2. Undo the nuts (2a) and remove the bracket (2b) for the catalytic converter-DPF assembly (2c).

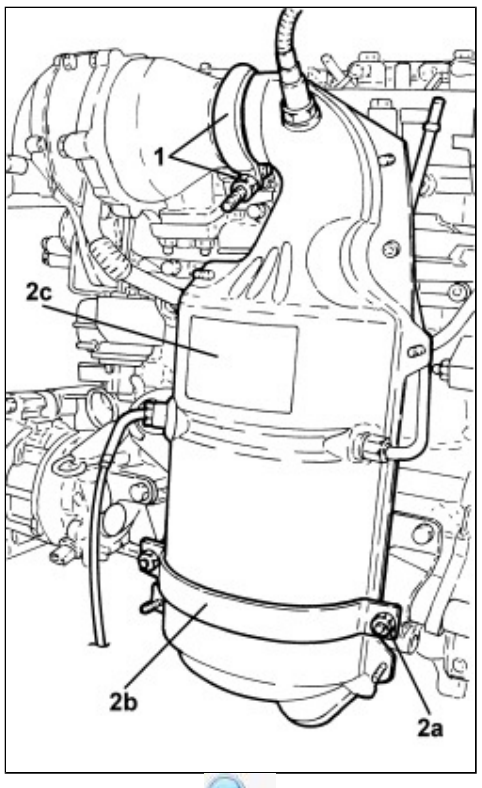

1. Undo the connectors (1a) and remove the engine oil delivery pipe to the turbocharger (1b).

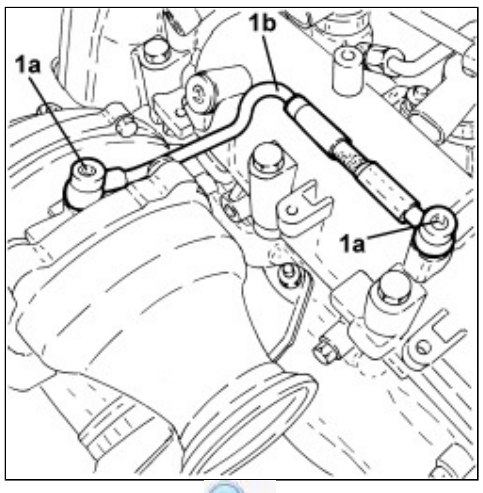

1. Undo the screws (1a) and remove the turbocharger engine oil return pipe (1b).

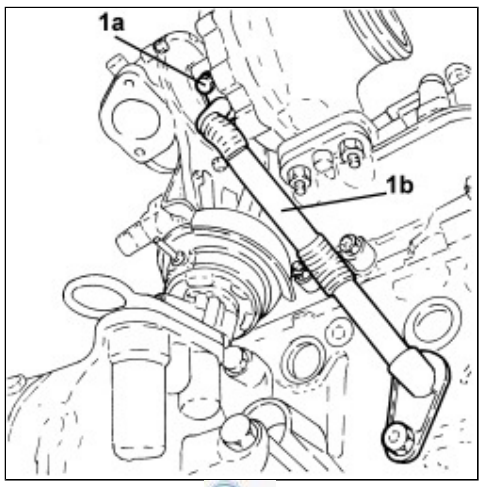

1. Undo the screws and remove the oil dipstick tube.

2. Undo the nuts (2a), remove the spacers and the exhaust manifold-turbocharger assembly (2b).

- Remove the gasket.

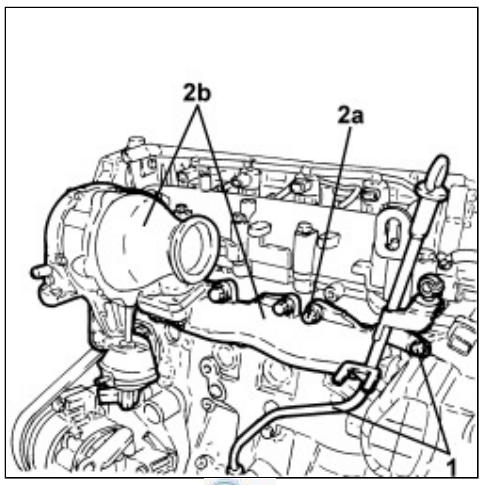

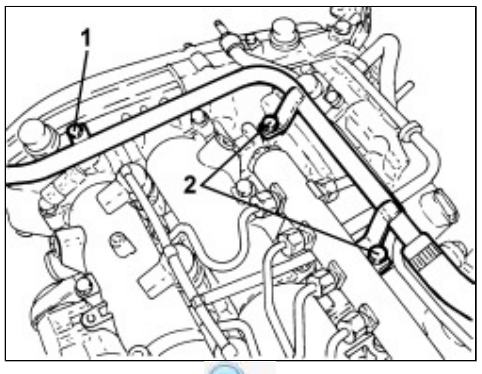

1. Undo the screw fixing the engine oil vapour recovery pipe to the camshaft housing.

2. Undo the screws securing the engine oil recovery pipe to the air chamber.

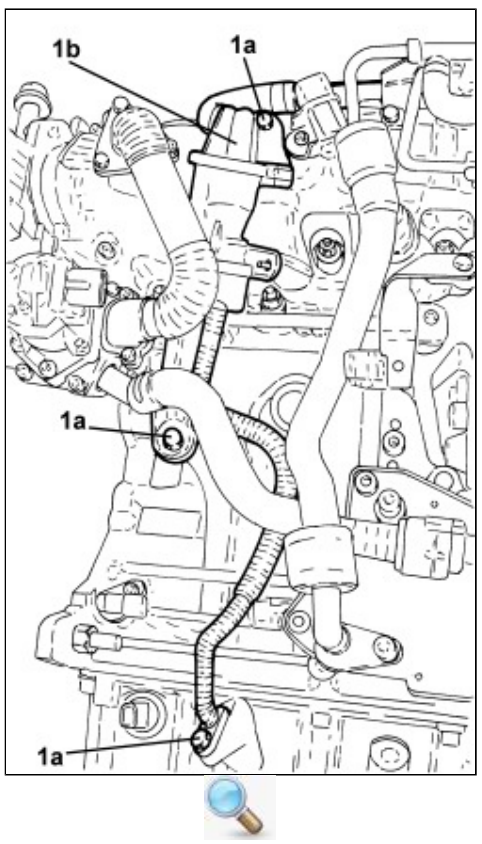

1. Undo the screws (1a) and remove oil vapour separator (1b) complete with pipes.

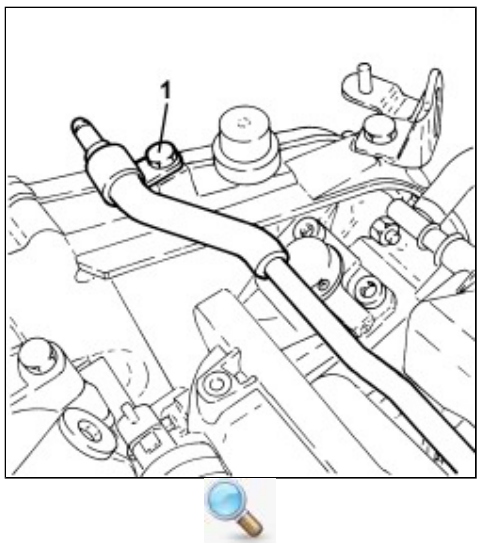

1. Undo the screw fixing the degassing pipe to the pressure pump mounting.

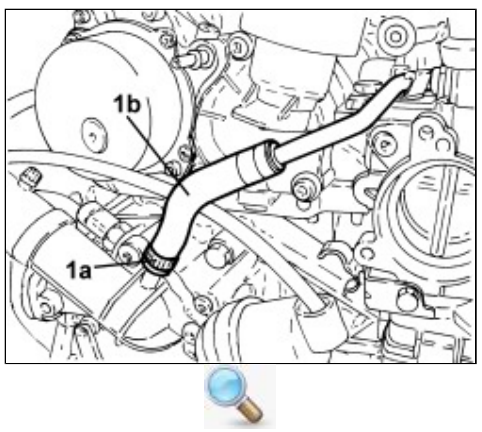

1. Loosen the band (1a) and remove the degassing pipe (1b).

1. Unscrew the connectors and remove the pipes from the fuel manifold to the injectors.

2. Undo the connectors and remove the pipe from the pressure pump to the fuel manifold.

3. Undo the screws and remove the fuel manifold pipe.

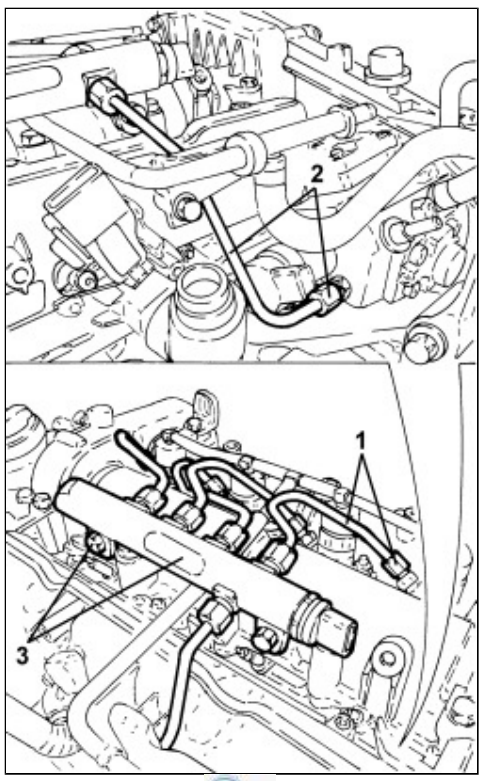

1. Disconnect the fuel return pipe from the injectors, return manifold side.

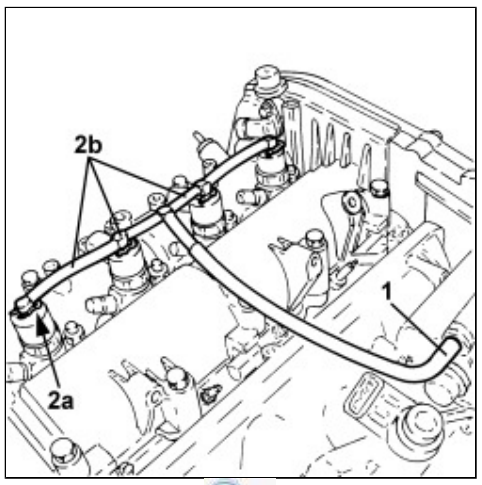

2. Push the clips (2a) by hand, then disconnect the fuel return pipe from the injectors (2b), injector side, and remove it.

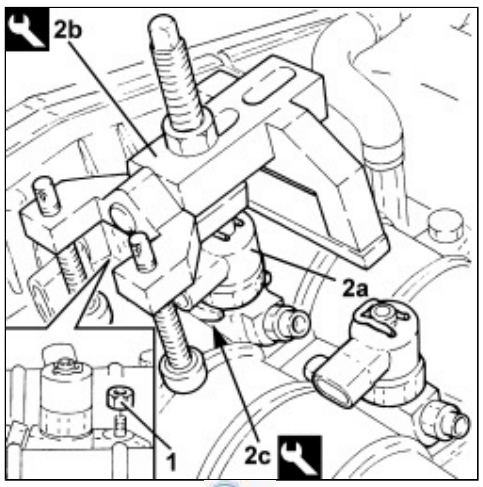

1. Undo the injector bracket retaining nuts.

2. Remove the injectors (2a) complete with brackets using the tools (2b) and (2c).

Tool	Description	Function	Validity
1870739000	Estrattore	Rimozione elettroiniettori	1.6 JTDM
Tool	Description	Function	Validity
1870897300	Adattatore	Rimozione elettroiniettori	1.6 JTDM

If new injector(s) is (are) being fitted, check that the engine management control unit recognizes the new injector(s) using the Examiner, to check that the engine management control unit has recognised the new injector/s.

Start the removal beginning with the injector for cylinder no. 1 and continue with the injectors for cylinders 2, 3 and 4.

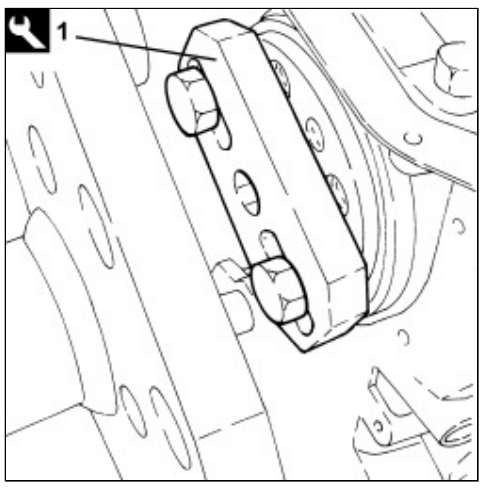

1. Fit the tool for rotating the crankshaft.

Tool	Description	Function	Validity
1860815000	Flangia	Rotazione albero motore	1.6 JTDM

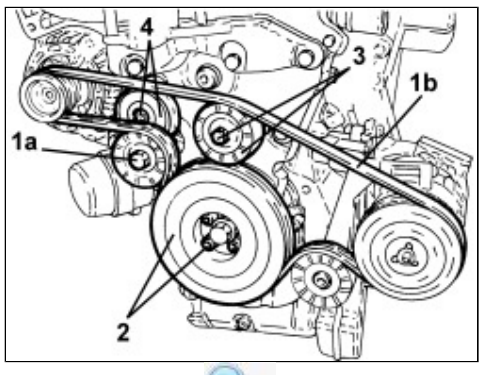

1. Adjust the moving tensioner (1a) using a spanner, then release and remove the auxiliary drive belt (1b).

2. Undo the screws and remove the service pulley on the crankshaft using the flange fitted previously for counter-torque.

3. Undo the screw and remove the auxiliary drive belt fixed tensioner, engine mounting side.

4. Undo the screw and remove the auxiliary drive belt moving tensioner.

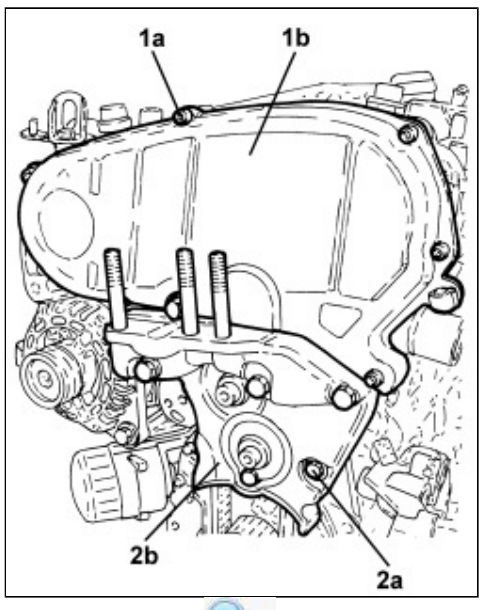

1. Undo the screws (1a) and remove the protective timing cover (1b).

2. Undo the screws (2a) and remove the timing side rigid engine mounting (2b).

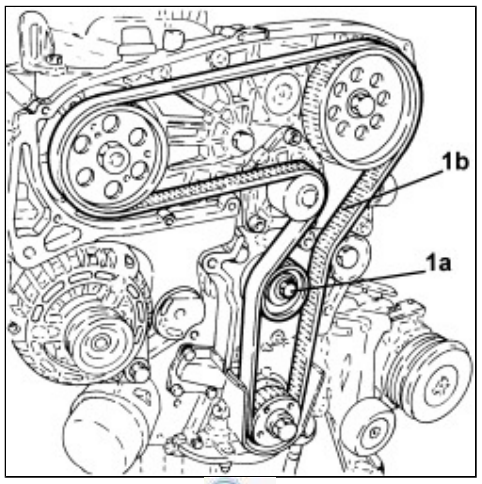

1. Loosen the moving timing belt tensioner fastening screw (1a), then release and remove the toothed timing drive belt (1b).

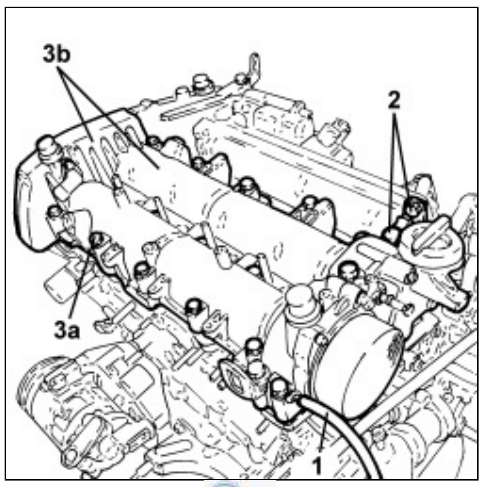

1. Disconnect the vacuum pipe from the vacuum unit.

2. Undo the screws and remove the bracket connecting the camshaft housing to the air chamber.

3. Undo the screws (3a) and remove the camshaft housing assembly (3b).

- Remove the gasket.

1. Loosen the band and disconnect the fuel return pipe from the pressure pump.

2. Disconnect the quick connectors (2a) and remove the coolant outlet pipe from the engine oil heat exchanger (2b).

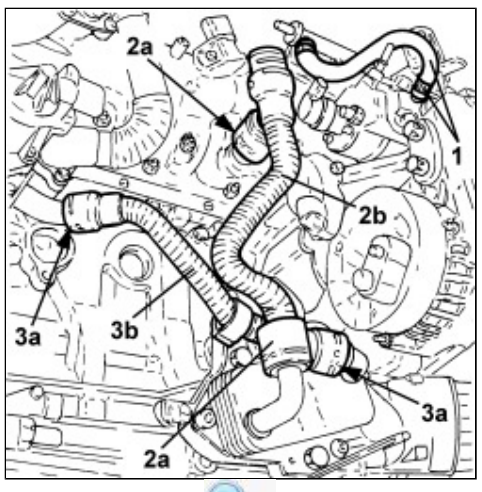

3. Disconnect the quick connectors (3a) and remove the coolant supply pipe to the engine oil heat exchanger (3b).

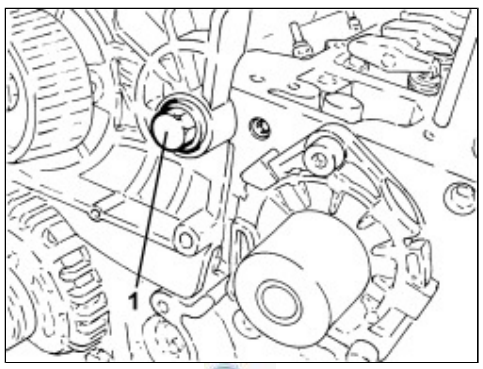

1. Undo the screw fixing the pressure pump mounting to the cylinder head.

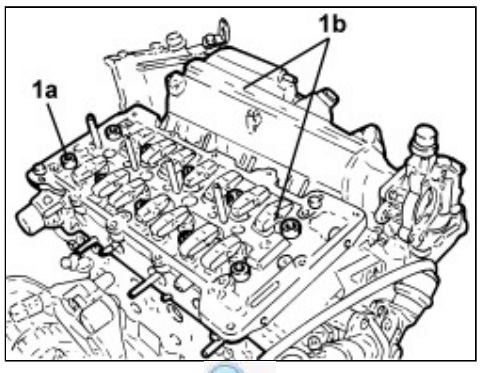

1. Undo the screws (1a) and remove the cylinder head assembly (1b).

- Remove the gasket.

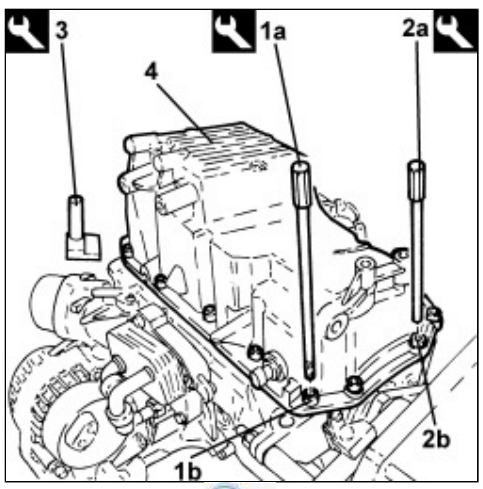

- Rotate the engine through 180° on the overhaul stand.

1. Undo the side screws (1b) using the tool (1a).

Tool	Description	Function	Validity
1860834000	Chiave	Svitare/serrare viti testa cilindri superiore Svitare/serrare viti laterali coppa del basamento	1.6 JTDM

2. Undo the front and rear screws (2b) using the tool (2a).

Tool	Description	Function	Validity
1860833000	Chiave	Svitare/serrare viti coppa del basamento lato distribuzione e lato cambio	1.6 JTDM

3. Using the tool, cut the sealant along the entire perimeter of the engine oil sump.

Tool	Description	Function	Validity

1870718000	Lama	Tagliare sigillante	1.6 JTDM

4. Remove the oil sump.

- Thoroughly clean the contact surfaces between the engine block and the oil sump thoroughly.